Leica Viva TS16
Equipment List

PART OF HEXAGON

- when it has to be **right**

Leica Geosystems

GEOOPTIC.RU

Table of Contents

Total Station 5

1 TS16 5
1.1 Models 5
1.2 Angular Accuracies 5

Additional Options & Accessories 6

2 Additional Options for Total Station 6
2.1 Hardware Options 6
2.2 TS16 I Camera Calibration 6
2.3 Calibration and Producer Certificates 6

3 Leica Captivate Apps & Software Options 7
3.1 Leica Captivate Software for TS 7
3.2 Apps included in Leica Captivate for TS (827 646) 7
3.3 Optional Leica Captivate Software and Apps for TS 8
3.4 Loadable Leica Captivate apps for TS 8

Accessories for Total Station 9

4 Power Supply 9
4.1 Internal Batteries 9
4.2 External Batteries 9
4.3 Battery Chargers 9

5 Data Storage and Data Transfer 9
5.1 Memory Devices 9
5.2 Card Reader 9

6 Connectivity 10
6.1 Connector Types 10
6.2 Cables 10

7 Optical Accessories 11
7.1 Eyepiece 11
7.2 Autocollimation Set 11
7.3 Objective 11

8 Instrument Height Meter 11

9 Tribrachs 11

10 Tripods 11

11 Reflector Poles 12
11.1 Standard Poles with stub 12
11.2 Standard Poles with 5/8" screw 12
11.3 Hidden Point Pole 12
11.4 Mini Pole 12

12 Reflector Carriers 13

13 Reflectors 13
13.1 Circular Reflectors 13
13.2 Precision Reflectors 13
13.3 360° Reflectors with stub adapter 13
13.4 360° Reflectors with 5/8" screw adapter 13
13.5 Mini Reflectors 13
13.6 Reflector Tapes 13

14 Pen and Screen Protection Foils 14

15 Additional Containers & Accessories for Containers 14

Remote Control 15

16 CS20 Field Controller 15
16.1 CTR20 TS Communication Expansion Pack 15

17 CC200 Tablet 16

18 CC180 Tablet 16

GEOOPTIC.RU

19 CS30 Tablet **17**
19.1 CS30 Tablet 17
19.2 GKP100 Keypad 17

Accessories for Remote Control 18

20 RadioHandle and TCPS Modem **18**
20.1 RadioHandle 18
20.2 TCPS Modem 18
20.3 TCPS Accessories 18
20.4 Cables for TCPS Radio Modem 18

21 AP20 AutoPole **19**
21.1 Models 19
21.2 Internal Battery 19
21.3 Reflector poles for AP20 19
21.4 AP20 Reflector poles accessories 20

SmartPole & SmartStation 21

22 SmartStation & Smartpole Setup using a GS16 GNSS Receiver **21**
22.1 GS16 GNSS Receiver 21
22.2 SmartAntenna Adapter 21

23 SmartPole using GS18 GNSS Receiver **22**
23.1 GS18 I GNSS Receiver 22
23.2 GS18 T GNSS Receiver 23
23.3 GS18 GNSS Receiver 24

HxGN GeoCloud 25

24 GeoCloud Drive **25**

Care Packages 26

25 Customer Care Packages **26**

Trademarks & Technical Data 27

26 Trademarks **27**

27 Technical Data **27**

Suggested Equipment Setups 28

28 Conventional Surveying **28**
28.1 Two Person Surveying using a TS16 Total Station 28
28.2 Two Person Surveying using a TS16 and AP20 29
28.3 Robotic Surveying using a TS16 Total Station and Field Controller/Tablet 30
28.4 Robotic Surveying using a TS16, AP20 and Field Controller/Tablet 31

29 SmartPole Surveying **32**
29.1 SmartPole using a GS16 or GS18 GNSS Receiver and Field Controller/Tablet 32
29.2 SmartPole using AP20, a GS16/GS18 GNSS Receiver and a Field Controller/Tablet 33

30 AP20 Pole configurations **34**
30.1 GLS51/GLS51F Setup with 1m extension and various tips 34
30.2 GLS54 Mini Pole Setup with various tips and holder 35

31 SmartStation using the GS16 GNSS Receiver **36**

GEOOPTIC.RU

GEOOPTIC

Total Station

1 TS16

1.1 Models

	TS16 M	TS16 A	TS16 G	TS16 P	TS16 I
Angle measurement	●	●	●	●	●
Distance measurement to prism	●	●	●	●	●
Distance measurement to any surface (reflectorless)	●	●	●	●	●
Motorised	●	●	●	●	●
AutoHeight (automatic Instrument height)	●	●	●	●	●
Automatic Target Aiming (ATRplus)	-	●	●	●	●
Lock mode	-	●	●	●	●
DynamicLock	-	-	-	○	○
PowerSearch (PS)	-	-	-	●	●
Overview Camera	-	-	-	-	●
Laser Guide (GUS74)	-	-	●	-	-
RS232, USB and SD card interface	●	●	●	●	●
WLAN	●	●	●	●	●
Bluetooth	●	●	●	●	●
Internal Flash Memory (4 GB)	●	●	●	●	●
Hotshoe interface for RadioHandle	●	●	●	●	●
Guide Light (EGL)	●	●	-	●	●
LOC8 or LOC8 LTE	○	○	○	○	○
AutoPole AP20 H	○	○	○	○	○
AutoPole AP20 ID	-	-	-	○	○
AutoPole AP20 T	-	○	○	○	○
AutoPole AP20	-	-	-	○	○
CS20 Field controller connection	○	○	○	○	○
CS30/CC180/CC200 Tablet connection	○	○	○	○	○
SmartStation GS16 GNSS receiver	○	○	○	○	○

● Standard
○ Optional
- Not available

1.2 Angular Accuracies

		1" Accuracy	2" Accuracy	3" Accuracy	5" Accuracy
TS16 M	**PinPoint R500**	917463	917464	917465	917466
	PinPoint R1000	917458	917460	917461	917462
TS16 A	**PinPoint R500**	917454	917455	917456	917457
	PinPoint R1000	917450	917451	917452	917453
TS16 G	**PinPoint R30**	917467	917468	917469	
	PinPoint R1000	917470	917471	917472	
TS16 P	**PinPoint R500**	917446	917447	917448	917449
	PinPoint R1000	917442	917443	917444	917445
TS16 I	**PinPoint R500**	917434	917435	917436	917437
	PinPoint R1000	917429	917430	917431	917432

☞ All TS16 models are delivered with one 5" WVGA colour touch screen, Quick Guide, documentation USB card (833146) and container GVP725 (817058).

GEOOPTIC.RU

Additional Options & Accessories

2 Additional Options for Total Station

2.1 Hardware Options

879378	**GTS49**	Full keyboard for 2nd face on TS16 models with Autoheight, fitted. Contains 840 313 KDU
874451	**GTS46**	LOC8 (2G/3G) theft deterrence and location device for automated total stations with 2G and 3G network support, fitted. One year of subscription included.
989209	**GTS52**	LOC8 (2G/3G/4G) theft deterrence and location device for automated total stations with 2G, 3G and 4G network support, fitted. One year of subscription included.
308838	**FOK53**	Magnification eyepiece, additional eyepiece for increasing telescope magnification to 42x. ☞ Modification ex factory. Can only be ordered with a new instrument.

2.2 TS16 I Camera Calibration

793861	Overview camera calibration workflow. Article ensures the predelivery logistics for the calibration of the overview camera of the Leica Viva TPS. ☞ 3rd party fees for instrument calibration and licensing of software are not included.

2.3 Calibration and Producer Certificates

812535	Calibration Certificate “Gold”, Angle
812536	Calibration Certificate “Gold”, A + Dist IR
812539	Calibration Certificate “Gold”, A + Dist, IR&RL
812542	Calibration Certificate “Silver”, Angle
812543	Calibration Certificate “Silver”, A + Dist, IR
812544	Calibration Certificate “Silver”, A + Dist, IR&R

☞ Calibration Certificate “Blue” (812541) is always included in initial order (myWorld download).

☞ For Service Calibration Certificates see Standard Service Products (SSPs) document.

GEOOPTIC.RU

3 Leica Captivate Apps & Software Options

3.1 Leica Captivate Software for TS

827646	Leica Captivate Measure & Stake for TS/MS.

3.2 Apps included in Leica Captivate for TS (827 646)

	Measure includes: • Measure • Code points • Automatically measure points • Remote Heights • Target Offset calculations
	Setup includes: • Get station coordinates from GNSS, from Job or enter manually • Orientation by known Azimuth • Orientation by known Backsight • Orientation & Height transfer to up to 10 target points • Resection up to 10 target points • Resection Helmert • Orientation to Line • Orientate to Object
	Stake points includes: • Navigate to point using various methods: from and behind instrument, point, base line, arrow, North • Quality control - checking of coordinate differences before storing • Automatically select next closest point • Graphical selection of point from map • Edit heights and offset heights of points • Acoustic beep getting faster when getting closer to point
	COGO includes: • Inverse • Traverse • Intersections • Angle calculations • Line & arc calculations • Bearing & distance calculations • Shift, Rotate, Scale (manual & matching points) • Triangle calculations • Rectangle
	Determine coordinate system: • 1 step, 2 step, 3D Transformation • All common projections
	Alignment Editor: • Horizontal alignments • Vertical alignments • Cross sections • Chainage equations
	Control Data: • Create points and lines
	Data import: ASCII, XML, DXF, DTM, alignments
	Data export: ASCII, Custom, DXF, XML, Style Sheets, FBK, RW5, RAW and local formats

GEOOPTIC.RU

3.3 Optional Leica Captivate Software and Apps for TS

The following apps require a valid license key.

834221	**Athletics**
827650	**Area Division**
827651	**Stake DTM**
827648	**Measure and Stake to Line**
827649	**Measure to Plane / Grid**
827653	**Check and Stake Road**
827654	**Check and Stake Tunnel**
827655	**Check and Stake Rail**
827658	**Sets of Angles**
827652	**Volume Calculation**
827656	**Hidden Point**
827657	**Traverse**
827659	**QuickVolume**
901400	**DynamicLock for TS16P and TS16I**
903372	**ConX 1y**
903373	**ConX 2y**
903374	**ConX 3y**
923922	**BricSys 24/7 1y**
923925	**BricSys 24/7 2y**
923928	**BricSys 24/7 3y**

The following app can be used without a valid license key.

834226	**Set Orientation**

3.4 Loadable Leica Captivate apps for TS

The following apps require a valid license key.

834218	**Offset+**
834224	**Zenith Line**
834227	**Quick Setup**
834229	**Auto Setup**
834230	**Remote Monitoring**
836522	**Machine Control Guidance**
839678	**Inspect Surfaces**
836669	**Tunnel Profile Generator**
846826	**TPS Survey Streaming**
850622	**ESRI Shapefile Exporter**
834226	**Set Orientation** Can be used without a valid license key.
847944	**Inspect Road** Requires 839678 Inspect Surfaces.
847945	**Inspect Tunnel** Requires 839678 Inspect Surfaces.
847952	**Inventory**
865657	**Compaction Control**
867331	**Stakeout Auto Points**
869755	**Structural Steel**
944938	**Captivate Custom Field Data Export**

GEOOPTIC.RU

Accessories for Total Station

4 Power Supply

4.1 Internal Batteries

733270	**GEB221**	Lithium-Ion battery, 7.4V/4.4Ah, rechargeable. To be used with TS13/TS16.
971702	**GEB223**	Lithium-Ion battery, 7.2V/6.4Ah, rechargeable. To be used with TS13/TS16.

4.2 External Batteries

905305	**GEB373**	External universal battery, Li Ion, 13V, 289 Wh, rechargeable.
807696	**GEV270**	Power supply unit for TPS/GNSS/DNA. For indoor use only. Input 100-240VAC to output 13.2VDC, with connection for power cables. ☞ Requires a GEV52 or GEV187 cable for Viva TS.

4.3 Battery Chargers

799185	**GKL311**	Single-bay Charger Professional 3000. Charger for one Li-Ion battery (GEB211, GEB212, GEB221, GEB223, GEB241, GEB242, GEB243, GEB321, GEB331, GEB333, GEB334, GEB361, GEB363 and GEB364), including AC/DC adaptor and cigarette lighter cable.
799187	**GKL341**	Multi-bay Charger Professional 5000. Charges up to 4 batteries (GEB211, GEB212, GEB221, GEB223, GEB241, GEB242, GEB243, GEB321, GEB331, GEB333, GEB334, GEB361, GEB363 and GEB364), including power cable
774437	**GEV242**	Charger for GEB371 / GEB373 external battery.

5 Data Storage and Data Transfer

5.1 Memory Devices

767856	**MSD1000**	SD memory card 1GB for Leica Viva TPS and Leica Nova instruments and CS20 field controller, industrial grade.
789139	**MSD08**	SD memory card 8GB for Leica Viva TPS and Leica Nova instruments and CS20 field controller, industrial grade.
765199	**MS1**	USB memory stick, 1GB, for Leica Viva TPS and Leica Nova instruments and CS20 field controller, industrial grade.

5.2 Card Reader

767895	**MCR7**	Card reader for SD/CF cards.

GEOOPTIC.RU

6 Connectivity

6.1 Connector Types

Name	Used on	
Lemo0 5-pin	Leica Viva TPS	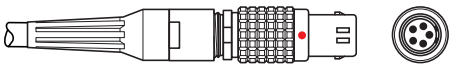
Lemo1 5-pin	Battery / External power	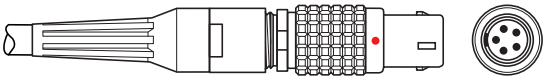
Lemo1 8-pin	Leica Viva field controllers / Leica Nova TPS	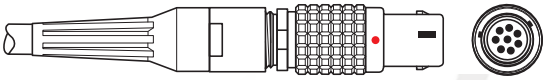
Lemo1 8-pin	External TS radios	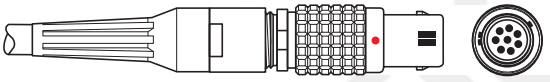
USB A	PC / Laptop	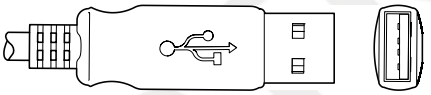
USB Mini	Leica Viva TPS	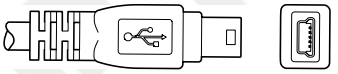
9-pin RS232 serial	PC / Laptop	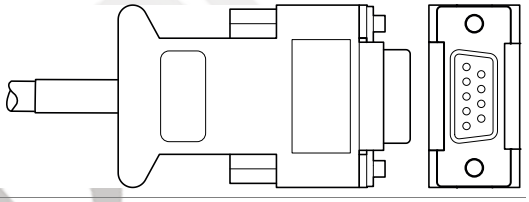

6.2 Cables

409678	**GEV52**	Battery cable, connects Leica Viva Total Stations or DNA Lemo0 5-pin to external battery connector Lemo 1 5-pin.
439038	**GEV71**	Car battery cable, connects 12V car battery connector to Lemo1 5-pin female.
563625	**GEV102**	Serial data cable for communication to PC, connects Lemo0 5-pin (instrument) to PC (9-pin RS232 serial), 2m.
734698	**GEV187**	Serial data Y-cable, connects Lemo0 5-pin connector to PC (9-pin RS232 serial) and external battery (Lemo1 5pin), 2m.
756367	**GEV217**	Serial data cable for communication between Leica Viva Total Stations and CS10/CS15, connects Lemo0 5-pin to Lemo1 8-pin, 1.8m.
764700	**GEV223**	Data transfer cable connecting TS to PC, USB Mini connector to USB A.
806093	**GEV267**	Serial data transfer cable, converter cable USB A to Lemo0 5-pin, connects PC to Leica Viva Total Stations, PC driver included on CD.
707525	**GK1**	Lemo Canon converter 30°, for PC (Lemo 0 5-pin to RS232) to be used with GEV186 cable.
734697	**GEV186**	Serial data Y-cable for TS robotic setup, Lemo1 5-pin (battery) to Lemo0 5-pin (instrument) and Lemo1 8-pin (external TS radio).

GEOOPTIC.RU

7 Optical Accessories

7.1 Eyepiece

377802	**FOK53**	Magnification eyepiece, additional eyepiece for increasing telescope magnification to 42x. ☞ Modification in a workshop necessary.
793979	**GFZ3**	Diagonal eyepiece for telescope with bayonet connection.

7.2 Autocollimation Set

199899	**GOA2**	Autocollimation eyepiece.
394787	**GEB62**	Plug-in lamp, with cable for autocollimation eyepiece.
394792	**GEB63**	Battery box for autocollimation eyepiece and eyepiece lamp.

7.3 Objective

743504	**GVO13**	Objective solar filter for TPS instruments.

8 Instrument Height Meter

667718	**GHM007**	Instrument height meter.
722045	**GHT196**	Distance holder for height meter.
6010179		Height Meter set including GHM007 Instrument height meter and GHT196 Distance holder for height meter.

9 Tribrachs

777508	**GDF321**	Tribrachs Series 5000, without optical plummet.
777509	**GDF322**	Tribrachs Series 5000, with optical plummet.
842061	**GDF311**	Tribrachs Series 3000, without optical plummet.
842062	**GDF312**	Tribrachs Series 3000, with optical plummet.

10 Tripods

296632	**GST20**	Heavy duty tripod, with side clamp screws, carrying strap and plumb bob.
394752	**GST20-9**	Heavy duty tripod, with side clamp screws and carrying strap.
667301	**GST120-9**	Heavy duty tripod, self-closing, with side clamp screws and carrying strap.
332200	**GST4**	Tripod-star, for setting up tripods on hard and slippery surfaces.

GEOOPTIC.RU

11 Reflector Poles

11.1 Standard Poles with stub

754391	**GLS12**	Reflector pole, telescopic to 2.00m with circular bubble, cm graduations.
754389	**GLS12F**	Reflector pole, telescopic to 2.00m with circular bubble, ft graduations.
766359	**GLS31**	Reflector carbon-fibre pole with circular bubble and twist lock. Snap-locks at 2.00m, 1.80m and 1.50m for GPS (GNSS) antennas with GAD31 adapter or GRZ122 reflector (SmartPole setup).
913901	**GLS51**	Telescopic carbon-fibre pole with stub interface, supports AP20 AutoPole product. With circular bubble, twist lock and dedicated snap-lock positions. Minimum length 1.34m, extendable to target height 2.20m, printed scale on extendable and lower tube, graduation in cm.
913902	**GLS51F**	Telescopic carbon-fibre pole with stub interface, supports AP20 AutoPole product. With circular bubble, twist lock and dedicated snap-lock positions. Minimum length 4.5 ft, extendable to target height 7.0 ft, printed scale on extendable and lower tube, graduation in ft.
385500	**GLS11**	Reflector pole, telescopic, with circular bubble, cm and ft graduation, extends to 2.15m.
667309	**GLS111**	Reflector pole, with bull's-eye bubble, cm/ft graduation, extends to 2.60m, with red/white 0.20m graduations.
667310	**GLS112**	Reflector pole, with bull's-eye bubble, cm/ft graduation, extends to 3.65m, with red/white 0.20m graduations.
555720	**GSR2**	Dual-strut support for GLS11 plumbing pole.
667319	**GSR111**	Dual-strut support for all GLS.
403428	**GZW12**	Extension 1m long, for reflector pole GLS11 and carriers.

11.2 Standard Poles with 5/8" screw

913899	**CRP4**	Telescopic carbon-fibre pole with 5/8" screw thread interface, supports AP20 AutoPole product. With upright circular bubble and upside-down circular bubble, twist lock and dedicated snap-lock positions. Minimum length 1.37m, extendable to target height 2.20m, printed scale both on extendable tube and lower tube, graduation in cm.
913900	**CRP5**	Telescopic carbon-fibre pole with 5/8" screw thread interface, supports AP20 AutoPole product. With upright circular bubble and upside-down circular bubble, twist lock and dedicated snap-lock positions. Minimum length 4.55 ft, extendable to target height 7.0 ft, printed scale both on extendable tube and lower tube, graduation in ft.

☞ CRP4 and CRP5 only support MPR122 360° reflector with 5/8" screw adapter.

11.3 Hidden Point Pole

742329	**GMP112**	Hidden Point pole extension for GMP111 (mini prism pole set). Includes mini prism with holder and 30cm adapter pole. ☞ Additional GMP111 Mini prim (641615) required for complete Hidden Point pole set with two prisms.

11.4 Mini Pole

403427	**GLS14**	Mini reflector pole, (prism/target 20cm over point), with circular bubble.

GEOOPTIC.RU

12 Reflector Carriers

667313	**GRT144**	Carrier with stub.
874838	**SNLL321**	Precision carrier, with longitudinal bubble and zenith-nadir laser plummet.
428340	**GZR3**	Precision carrier, with longitudinal bubble and optical plummet.
725566	**GZR103**	Carrier, with longitudinal bubble and optical plummet, for reflectors and GPS antenna.
667217	**GAD31**	Screw-to-stub adapter for fitting GPS antenna on carriers with stub and poles with stub.

13 Reflectors

13.1 Circular Reflectors

641617	**GPR121**	Circular prism, with metal holder and target plate.
362830	**GPR1**	Circular prism, in black housing.
362820	**GPH1**	Single-prism holder.
400080	**GPH3**	Three-prism holder.
362823	**GZT4**	Target plate, for GPH1.

13.2 Precision Reflectors

555631	**GPH1P**	Single-prism precision reflector.

13.3 360° Reflectors with stub adapter

754384	**GRZ122**	360° reflector with 5/8" thread adapter for mounting of GNSS antenna.
639985	**GRZ4**	360° reflector.
644327	**GRZ101**	360° mini prism with 1/4" thread fitting. Not supported by PowerSearch.
742006	**GAD103**	Adapter for attaching GRZ101 to all poles with Leica Geosystems stub.

13.4 360° Reflectors with 5/8" screw adapter

756637	**MPR122**	360° reflector with 5/8" thread adapter for mounting of GNSS antenna and 5/8" screw nut.

13.5 Mini Reflectors

641662	**GMP101**	Mini prism, incl. bubble, target plate and spike, in bag, also suitable for GLS11/GLS12 and GRT144 (same height as GPH1, additive constant +17.5mm).
641762	**GMP104**	Mini prism, with L-bar, for fixed installations.

13.6 Reflector Tapes

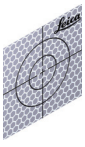

763532	**GZM29**	Reflective tape, 20x20mm for short range, pack of 20 pieces.
763533	**GZM30**	Reflective tape, 40x40mm for medium range, pack of 20 pieces.
763534	**GZM31**	Reflective tape, 60x60mm for long range, pack of 20 pieces.

GEOOPTIC.RU

14 Pen and Screen Protection Foils

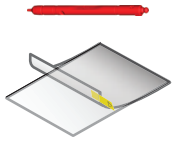

Extra pen		
813914	**GDZ71**	Pen with tether clip interface for CS20 field controller and TS16/MS60/TS60 instruments.
Screen Protection Foil set		
813781	**SPF05**	5" WVGA screen protection foils for CS20 field controller and TS16/MS60/TS60 instruments.

15 Additional Containers & Accessories for Containers

727589	**GVP102**	Soft bag with shoulder strap, for prism station, consist of tribrach, prism carrier or laser plummet and prism.
833516	**GVP716**	Backpack carrying systems for all large TPS and GNSS containers.
833517	**GVP717**	Sidebag for container
833518	**GVP718**	Basic backstrap for container
833519	**GVP719**	Shoulderstrap for container
914930	**GVP738**	Hard container for 2 prisms, 2 carriers/laser plummets, 2 tribrachs, CS10, CS15, CS20, CS30, CC200 and AP20. All controllers/tablets fit with attached holder.
980899	**GVP750**	Hard container for SmartAntenna, CS Field Controller and accessories for a SmartPole and SmartStation setup.
980900	**GVP751**	Small-sized hard container for 360° prism and controller for TS Robotic Pole setup.
948752	**GVP761**	Hard container, for CS20, CS30 and CC200 field controller/tablet including attached holders, 360° prisms and AP20.

GEOOPTIC

GEOOPTIC.RU

Remote Control

16 CS20 Field Controller

971176	**CS20**	**CS20 Basic Field Controller** Ruggedized field controller with 5" WVGA touch display, 4GB eMMC Flash Memory, 1GB SDRAM, SD card slot, 5MP rear camera and LED flash. Includes internal Bluetooth/WLAN module, internal TS communication module, QWERTY keypad, stylus.
971177	**CS20 LTE**	**CS20 LTE Field Controller** Ruggedized field controller with 5" WVGA touch display, 4GB eMMC Flash Memory, 1GB SDRAM, SD card slot, 5MP rear camera and LED flash. Includes internal Bluetooth/WLAN module, 4G GSM/UMTS/LTE module, internal TS communication module, QWERTY keypad, stylus.
971178	**CS20 LTE (US/CA)**	**CS20 LTE Field Controller (US, CA)** Ruggedized field controller with 5" WVGA touch display, 4GB eMMC Flash Memory, 1GB SDRAM, SD card slot, 5MP rear camera and LED flash. Includes internal Bluetooth/WLAN module, 4G GSM/UMTS/LTE module, internal TS communication module, QWERTY keypad, stylus.
876478	**CS20 LTE Disto**	**CS20 LTE Disto Field Controller** Ruggedized field controller with 5" WVGA touch display, 4GB eMMC Flash Memory, 2GB SDRAM, SD card slot, 5MP rear camera and LED flash. Includes internal Bluetooth/WLAN module, 4G GSM/UMTS/LTE module, internal TS communication module, integrated Disto-Lasermeter QWERTY keypad, stylus.
876480	**CS20 LTE Disto (US/CA)**	**CS20 LTE Disto Field Controller (US, CA)** Ruggedized field controller with 5" WVGA touch display, 4GB eMMC Flash Memory, 2GB SDRAM, SD card slot, 5MP rear camera and LED flash. Includes internal Bluetooth/WLAN module, 4G GSM/UMTS/LTE module, internal TS communication module, integrated Disto-Lasermeter QWERTY keypad, stylus.

16.1 CTR20 TS Communication Expansion Pack

☞ Not available in EU countries due to EN 300 328 V.1.8.1.

☞ Recommended only for robotic applications systematically exceeding ranges beyond 400 m.

6010023		**CTR20 expansion pack set** TS communication expansion pack set including CTR20 module and GAT25 radio antenna.
808038	**CTR20**	**CTR20 TS communication expansion pack** CTR20 TS communication expansion pack with integrated radio module for CS20 3.75G field controller variants. Used to establish long range radio connection between CS20 3.75G field controller and TS Total Stations equipped with RH16. GAT25 radio antenna not included (frequency range 2402 - 2480 MHz). ☞ Requires a GAT25 radio antenna.
812027	**GAT25**	**GAT25 radio antenna for CTR20 module** Radio antenna for CTR20 long range TS communication module (frequency range 2402 - 2480 MHz).

GEOOPTIC.RU

17 CC200 Tablet

996657	**CC200-0-Cap, Tablet, Win 10, EU**	**CC200-0-Cap Tablet** Ruggedized Win10 Tablet PC with 10" screen, EU version, 10-point capacitive multi-touch daylight-readable screen, Intel Core i5-10310U vPro 1.7 GHz with Turbo Boost up to 4.46Hz, 500 GB SSD hard drive, 16 GB SDRAM, Intel® Wi-Fi6 AX201, Bluetooth v5.1, integrated 4G module, Integrated L1 GPS, extended battery (6300 Ah), up to 8 MP camera with autofocus with LED flash, Stylus, AC/DC adaptor and pre-loaded with Captivate.
996658	**CC200-1-Cap, Tablet, Win 10, US/CA/MX**	**CC200-1-Cap Tablet** Ruggedized Win10 Tablet PC with 10" screen, US/CA/MX version, 10-point capacitive multi-touch daylight-readable screen, Intel Core i5-10310U vPro 1.7 GHz with Turbo Boost up to 4.46Hz, 500 GB SSD hard drive, 16 GB SDRAM, Intel® Wi-Fi6 AX201, Bluetooth v5.1, integrated 4G module, Integrated L1 GPS, extended battery (6300 Ah), up to 8 MP camera with autofocus with LED flash, Stylus, AC/DC adaptor and pre-loaded with Captivate.
996659	**CC200-2-Cap, Tablet, Win 10, JP**	**CC200-2-Cap Tablet** Ruggedized Win10 Tablet PC with 10" screen, JP version, 10-point capacitive multi-touch daylight-readable screen, Intel Core i5-10310U vPro 1.7 GHz with Turbo Boost up to 4.46Hz, 500 GB SSD hard drive, 16 GB SDRAM, Intel® Wi-Fi6 AX201, Bluetooth v5.1, Integrated L1 GPS, extended battery (6300 Ah), up to 8 MP camera with autofocus with LED flash, Stylus, AC/DC adaptor and pre-loaded with Captivate.
996660	**CC200-3-Cap, Tablet, Win 10, KR**	**CC200-3-Cap Tablet** Ruggedized Win10 Tablet PC with 10" screen, KR version, 10-point capacitive multi-touch daylight-readable screen, Intel Core i5-10310U vPro 1.7 GHz with Turbo Boost up to 4.46Hz, 500 GB SSD hard drive, 16 GB SDRAM, Intel® Wi-Fi6 AX201, Bluetooth v5.1, Integrated L1 GPS, extended battery (6300 Ah), up to 8 MP camera with autofocus with LED flash, Stylus, AC/DC adaptor and pre-loaded with Captivate.
996661	**CC200-4-Cap, Tablet, Win 10, CN**	**CC200-4-Cap Tablet** Ruggedized Win10 Tablet PC with 10" screen, China version, 10-point capacitive multi-touch daylight-readable screen, Intel Core i5-10310U vPro 1.7 GHz with Turbo Boost up to 4.46Hz, 500 GB SSD hard drive, 16 GB SDRAM, Intel® Wi-Fi6 AX201, Bluetooth v5.1, Integrated L1 GPS, extended battery (6300 Ah), up to 8 MP camera with autofocus with LED flash, Stylus, AC/DC adaptor and pre-loaded with Captivate.
996662	**CC200-5-Cap, Tablet, Win 10, AUS/NZ**	**CC200-5-Cap Tablet** Ruggedized Win10 Tablet PC with 10" screen, AUS/NZ version, 10-point capacitive multi-touch daylight-readable screen, Intel Core i5-10310U vPro 1.7 GHz with Turbo Boost up to 4.46Hz, 500 GB SSD hard drive, 16 GB SDRAM, Intel® Wi-Fi6 AX201, Bluetooth v5.1,integrated 4G module, Integrated L1 GPS, extended battery (6300 Ah), up to 8 MP camera with autofocus with LED flash, Stylus, AC/DC adaptor and pre-loaded with Captivate.

18 CC180 Tablet

1008047	**CC180-0 Capt, Tablet, Win 10, EU/AUS/NZ**	**CC180-0 Capt Tablet** Ruggedized Win10 Tablet PC with 8", daylight-readable screen, 800 nits, Intel(R) Pentium(R) Gold 8500 1.0 GHz, 128 GB NVMe PCIe SSD, 8 GB SDRAM, Intel® Wi-Fi 6 AX211, Bluetooth v5.3, USB Type C (Support DP), Multicarrier 4G LTE Mobile Broadband & GPS Combo, extended battery (7200 mAh), 2.0 MP front-facing camera & 8.0 MP auto-focus rear camera with flash, Stylus, AC/DC adaptor and pre-loaded with Captivate.
1008048	**CC180-1-Capt, Tablet, Win 10, US/CA**	**CC180-1 Capt Tablet** Ruggedized Win10 Tablet PC with 8", daylight-readable screen, 800 nits, Intel(R) Pentium(R) Gold 8500 1.0 GHz, 128 GB NVMe PCIe SSD, 8 GB SDRAM, Intel® Wi-Fi 6 AX211, Bluetooth v5.3, USB Type C (Support DP), Multicarrier 4G LTE Mobile Broadband & GPS Combo, extended battery (7200 mAh), 2.0 MP front-facing camera & 8.0 MP auto-focus rear camera with flash, Stylus, AC/DC adaptor and pre-loaded with Captivate.

GEOOPTIC.RU

19 CS30 Tablet

19.1 CS30 Tablet

	925660	**CS30 LTE**	**CS30 LTE Tablet** Ruggedized Win10 LTSC 64-bit Tablet Computer including: 7" touch-widescreen, 64 GB eMMC hard drive, 4 GB RAM, WLAN 802.11 b/g/n/a/ac, 3G/4G Integrated Mobile Broadband module, Bluetooth v4.2, 8MP rear camera with flash, 1x GEV228 Power Supply unit, 1x GDZ80 Capacitive Stylus. Captivate pre-loaded.
	926415	**CS30 LTE LRBT**	**CS30 LTE LRBT** Ruggedized Win10 LTSC 64-bit Tablet Computer including: 7" touch-widescreen, 64 GB eMMC hard drive, 4 GB RAM, WLAN 802.11 b/g/n/a/ac, 3G/4G Integrated Mobile Broadband module, Bluetooth v4.2, 8MP Rear camera with flash, CTR30 Long-Range Bluetooth Module, 1x GEV228 Power Supply unit, 1x GDZ80 Capacitive Stylus.

19.2 GKP100 Keypad

	995129	**GKP100**	**GKP100 Keypad** GKP100, Leica Captivate keypad.

☞ Please refer to the Leica Captivate Controller Equipment list for CS20 / CS3x and CCx related options and accessories.

GEOOPTIC.RU

Accessories for Remote Control

20 RadioHandle and TCPS Modem

20.1 RadioHandle

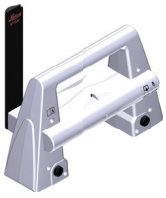

922840	**RH18**	RadioHandle with two integrated Bluetooth modules and radio antenna. Supports Bluetooth low energy for AP20 AutoPole with Tilt Compensation. Used as radio modem for Leica total stations running Leica Captivate field software. Establishes communication to field controller CS20/30/35 or with/without CTR20/30/35 Bluetooth stick or external radio modem TCPS29/TCPS30. Frequency range 2402 - 2480 MHz. ☞ fulfils EN 300 328 V.1.8.1.

20.2 TCPS Modem

818469	**TCPS30**	Bluetooth radio modem with antenna. Used as external radio modem for Leica Viva TPS and Leica Nova instruments or PCs. Frequency range 2402 - 2480 MHz. ☞ Fulfills EN 300 328 V.1.8.1.

20.3 TCPS Accessories

734163	**GHT43**	Adapter for mounting TCPS radio module on GST20/GST120 tripod.

20.4 Cables for TCPS Radio Modem

☞ For an overview of the different connector types, refer to chapter 6.1.

734697	**GEV186**	Serial data Y-cable for TS Robotic setup, Lemo1 5-pin (battery) to Lemo0 5-pin (instrument) and Lemo1 8-pin (external TCPS radio).
707525	**GK1**	Lemo Converter 30° for PC (9-pin RS232 serial). ☞ Use GK1 in combination with GEV186 to connect TCPS with PC for configuration or communication.
771057	**GEV236**	Y-cable Lemo1 8-pin (CS20 Field Controller) to Lemo1 5-pin (battery) and Lemo1 8-pin (external TCPS radio), 1.8 m.

GEOOPTIC.RU

21 AP20 AutoPole

21.1 Models

922835	**AP20 H**	AutoPole AP20 H with PoleHeight module ensures to automatically detect and apply target height to paired field SW.
922836	**AP20 ID**	AutoPole AP20 ID with TargetID module ensures to find and measure your target, wirelessly connected to your automated total station.
922837	**AP20 T**	AutoPole AP20 T with PoleHeight and Tilt Compensation module ensures to automatically detect and apply target height and to compensate a tilted pole alignment, wirelessly connected to your automated total station.
922838	**AP20**	AutoPole AP20 with PoleHeight, TargetID and Tilt compensation module ensures to detect and apply target height, to find and measure your target and to compensate a tilted pole alignment, wirelessly connected to your automated total station.

☞ AP20 AutoPole can only be attached to GLS51 / GLS51F / CRP4 / CRP5 Reflector Poles

☞ AP20 T and AP20 require 922840 RH18 on total station side to support Tilt Compensation.

21.2 Internal Battery

898414	**GEB321**	Lithium-Ion battery, 7.2 V/3.35 Ah, rechargeable. To be used with AP20 AutoPole.

21.3 Reflector poles for AP20

913901	**GLS51**	Telescopic carbon-fibre pole with stub interface, supports AP20 AutoPole. With circular bubble, twist lock and dedicated snap-lock positions. Minimum length 1.34 m, extendable to target height 2.20 m, printed scale on extendable and lower tube, graduation in cm.
913902	**GLS51F**	Telescopic carbon-fibre pole with stub interface, supports AP20 AutoPole. With circular bubble, twist lock and dedicated snap-lock positions. Minimum length 4.5 ft, extendable to target height 7.0 ft, printed scale on extendable and lower tube, graduation in ft.
979523	**GLS54**	Carbon mini pole with stub interface, supports AP20 AutoPole. Length 0.24 m. With GRZ122 and GLS51 pole tip (CRP10) a prism height of 0.228m is reached.
913899	**CRP4**	Telescopic carbon-fibre pole with 5/8" screw thread interface, supports AP20 AutoPole. With upright circular bubble and upside-down circular bubble, twist lock and dedicated snap-lock positions. Minimum length 1.37 m, extendable to target height 2.20 m, printed scale both on extendable tube and lower tube, graduation in cm.
913900	**CRP5**	Telescopic carbon-fibre pole with 5/8" screw thread interface, supports AP20 AutoPole. With upright circular bubble and upside-down circular bubble, twist lock and dedicated snap-lock positions. Minimum length 4.55 ft, extendable to target height 7.0 ft, printed scale both on extendable tube and lower tube, graduation in ft.
977380	**GLS53**	Carbon mini pole with 5/8" screw thread interface, supports AP20 AutoPole. Length 0.25 m. With MPR122 and CRP4 pole tip (CRP10) a prism height of 0.200 m is reached.

GEOOPTIC.RU

21.4 AP20 Reflector poles accessories

806685	**CRP10**	Construction Pole Tip, hard metal, prism height 0.200 m with MPR122 and 0.228 m with GRZ122.
806687	**CRP11**	Construction Pole Plate, tiltable plate, prism height 0.200 m with MPR122 and 0.228 m with GRZ122.
817344	**CRP12**	Center Punch Tip for all CRP poles, hard metal tip. Works on concrete, metal, wood. Prism height 0.200 m with MPR122 and 0.228 m with GRZ122.
817345	**CRP13**	Adapter for fixing CRP10, CRP11, CRP12 to feet scale CRP and GLS poles.
820845	**CRP14**	Handle with circular bubble, fits all CRP / GLS poles with 5/8" thread interface. or MPR122 / GRZ122 prisms.
977379	**GLS52**	Carbon pole extension, length 1m, with 5/8" thread interface

GEOOPTIC

GEOOPTIC.RU

SmartPole & SmartStation

22 SmartStation & Smartpole Setup using a GS16 GNSS Receiver

22.1 GS16 GNSS Receiver

851142	**GS16**	**Leica GS16 Basic SmartAntenna EG ***
947069	**GS16**	**Leica GS16 Basic SmartAntenna ***
939764	**GS16**	**Leica GS16 UHF Basic SmartAntenna ***
939763	**GS16**	**Leica GS16 UHF Regional SmartAntenna ***
939767	**GS16**	**Leica GS16 UHF Performance SmartAntenna**
939768	**GS16**	**Leica GS16 UHF Unlimited SmartAntenna**

* Available in selected countries only.

	Leica GS16 Basic *	Leica GS16 Regional *	Leica GS16 Performance	Leica GS16 Unlimited
Supported GNSS Systems				
Multi-frequency (L1, L2, L5, L-band)	●	●	●	●
GLONASS	○	○	○	●
Galileo	○	○	○	●
BeiDou	○	○	○	●
QZSS / NavIC	○	○	○	●
RTK performance				
DGPS	●	●	●	●
RTK unlimited	○	●	●	●
Network RTK	○	●	●	●
HxGN SmartNet Global	○	○	○	○
Interference mitigation	○	○	○	○
Position update & data recording				
20 Hz positioning	●	●	●	●
Raw data logging	●	●	●	●
RINEX logging	○	○	○	●
NMEA out	○	○	○	●
Additional features				
RTK Reference Station functionality	○	●	●	●
No country limitation	●	○	●	●

● Standard
○ Optional

22.2 SmartAntenna Adapter

767802	**GAD110**	SmartAntenna adapter to mount GS16 SmartAntenna. ☞ BT module to connect the TS to the GS16 GNSS receiver is standard on all Leica Viva TPS and Leica Nova instruments.

☞ Please refer to the Leica Captivate GNSS Equipment list for GS16 related options and accessories.

GEOOPTIC.RU

23 SmartPole using GS18 GNSS Receiver

23.1 GS18 I GNSS Receiver

949985	**GS18**	**Leica GS18 I LTE Basic SmartAntenna ***
982453	**GS18**	**Leica GS18 I LTE Regional SmartAntenna ***
864380	**GS18**	**Leica GS18 I LTE Performance SmartAntenna**
864381	**GS18**	**Leica GS18 I LTE Unlimited SmartAntenna**
949986	**GS18**	**Leica GS18 I LTE & UHF Basic SmartAntenna ***
982454	**GS18**	**Leica GS18 I LTE & UHF Regional SmartAntenna ***
864383	**GS18**	**Leica GS18 I LTE & UHF Performance SmartAntenna**
864384	**GS18**	**Leica GS18 I LTE & UHF Performance SmartAntenna (NAFTA)**
879671	**GS18**	**Leica GS18 I LTE & UHF Performance SmartAntenna (JP)**
864385	**GS18**	**Leica GS18 I LTE & UHF900 Performance SmartAntenna ***
864386	**GS18**	**Leica GS18 I LTE & UHF Unlimited SmartAntenna**

* Available in selected countries only.

	Leica GS18 I Basic *	Leica GS18 I Regional *	Leica GS18 I Performance	Leica GS18 I Unlimited
Supported GNSS Systems				
Multi-frequency (L1, L2, L5, L-band)	●	●	●	●
GLONASS	○	○	○	●
Galileo	○	○	○	●
BeiDou	○	○	○	●
QZSS / NavIC	○	○	○	●
RTK performance				
DGPS	●	●	●	●
RTK unlimited	○	●	●	●
Network RTK	○	●	●	●
HxGN SmartNet Global	○	○	○	○
Interference mitigation	○	○	○	○
Position update & data recording				
20 Hz positioning	●	●	●	●
Raw data logging	●	●	●	●
RINEX logging	○	○	○	●
NMEA out	○	○	○	●
Additional features				
Tilt compensation	●	●	●	●
Image point measurement	●	●	●	●
RTK Reference Station functionality	○	●	●	●
No country limitation	●	○	●	●

● Standard
○ Optional

GEOOPTIC.RU

23.2 GS18 T GNSS Receiver

949983	**GS18**	**Leica GS18 T LTE Basic SmartAntenna ***
899218	**GS18**	**Leica GS18 T LTE Regional SmartAntenna ***
855300	**GS18**	**Leica GS18 T LTE Performance SmartAntenna**
855301	**GS18**	**Leica GS18 T LTE Unlimited SmartAntenna**
949984	**GS18**	**Leica GS18 T LTE & UHF Basic SmartAntenna ***
899220	**GS18**	**Leica GS18 T LTE & UHF Regional SmartAntenna ***
855303	**GS18**	**Leica GS18 T LTE & UHF Performance SmartAntenna**
855304	**GS18**	**Leica GS18 T LTE & UHF Performance SmartAntenna (NAFTA)**
865980	**GS18**	**Leica GS18 T LTE & UHF Performance SmartAntenna (JP)**
945113	**GS18**	**Leica GS18 T LTE & UHF900 Performance SmartAntenna ***
855305	**GS18**	**Leica GS18 T LTE & UHF Unlimited SmartAntenna**

* Available in selected countries only.

	Leica GS18 T Basic *	Leica GS18 T Regional *	Leica GS18 T Performance	Leica GS18 T Unlimited
Supported GNSS Systems				
Multi-frequency (L1, L2, L5, L-band)	●	●	●	●
GLONASS	○	○	○	●
Galileo	○	○	○	●
BeiDou	○	○	○	●
QZSS / NavIC	○	○	○	●
RTK performance				
DGPS	●	●	●	●
RTK unlimited	○	●	●	●
Network RTK	○	●	●	●
HxGN SmartNet Global	○	○	○	○
Interference mitigation	○	○	○	○
Position update & data recording				
20 Hz positioning	●	●	●	●
Raw data logging	●	●	●	●
RINEX logging	○	○	○	●
NMEA out	○	○	○	●
Additional features				
Tilt compensation	●	●	●	●
RTK Reference Station functionality	○	●	●	●
No country limitation	●	○	●	●

● Standard
○ Optional

GEOOPTIC.RU

23.3 GS18 GNSS Receiver

939670	**GS18**	**Leica GS18 LTE Basic SmartAntenna ***
939669	**GS18**	**Leica GS18 LTE Regional SmartAntenna ***
939671	**GS18**	**Leica GS18 LTE Performance SmartAntenna**
939672	**GS18**	**Leica GS18 LTE Unlimited SmartAntenna**
939674	**GS18**	**Leica GS18 LTE & UHF Basic SmartAntenna ***
939673	**GS18**	**Leica GS18 LTE & UHF Regional SmartAntenna ***
939675	**GS18**	**Leica GS18 LTE & UHF Performance SmartAntenna**
939677	**GS18**	**Leica GS18 LTE & UHF Performance SmartAntenna (NAFTA)**
939679	**GS18**	**Leica GS18 LTE & UHF Performance SmartAntenna (JP)**
939678	**GS18**	**Leica GS18 LTE & UHF900 Performance SmartAntenna ***
939676	**GS18**	**Leica GS18 LTE & UHF Unlimited SmartAntenna**

* Available in selected countries only.

	Leica GS18 Basic *	**Leica GS18 Regional ***	**Leica GS18 Performance**	**Leica GS18 Unlimited**
Supported GNSS Systems				
Multi-frequency (L1, L2, L5, L-band)	●	●	●	●
GLONASS	○	○	○	●
Galileo	○	○	○	●
BeiDou	○	○	○	●
QZSS / NavIC	○	○	○	●
RTK performance				
DGPS	●	●	●	●
RTK unlimited	○	●	●	●
Network RTK	○	●	●	●
HxGN SmartNet Global	○	○	○	○
Interference mitigation	○	○	○	○
Position update & data recording				
20 Hz positioning	●	●	●	●
Raw data logging	●	●	●	●
RINEX logging	○	○	○	●
NMEA out	○	○	○	●
Additional features				
RTK Reference Station functionality	○	●	●	●
No country limitation	●	○	●	●

● Standard
○ Optional

Please refer to the Leica Captivate GNSS Equipment list for GS18 related options and accessories

GEOOPTIC.RU

HxGN GeoCloud

24 GeoCloud Drive

GeoCloud Drive is a data transfer and cloud storage service from the HxGN GeoCloud service suite. The GeoCloud Drive provides flexible access to your data from anywhere at any time.

979637	**GeoCloud Drive Trial 30d**	GeoCloud Drive Trial 30d. License to start a cloud storage Trial account within the HxGN GeoCloud portal. The Trial runs for 30 days and includes 25GB cloud storage and 5 users.
5311646	**GeoCloud Drive Subscription 1yr**	GeoCloud Drive Subscription 1yr. Yearly subscription for a cloud storage on the HxGN GeoCloud. The subscription includes 25GB storage and 1 user.
5311647	**GeoCloud Drive add User Subscription 1yr**	GeoCloud Drive add User Subscription 1yr. Yearly subscription to extend a cloud storage on the HxGN GeoCloud by 1 user and 25GB storage.
5311648	**GeoCloud Drive add Data Subscription 1yr**	GeoCloud Drive add Data Subscription 1yr Yearly subscription to extend a cloud storage on the HxGN GeoCloud by 100GB.

GEOOPTIC.RU

Care Packages

25 Customer Care Packages

A wide selection of comprehensive Customer Care Packages (CCPs) is available bundling Hardware Maintenance, Software Maintenance, Customer Support and Extended Warranty.
For more information about the CCP offering in your country please contact your local Leica Geosystems organization or distribution partner.

GEOOPTIC

GEOOPTIC.RU

Trademarks & Technical Data

26 Trademarks

The *Bluetooth*® word mark and logos are owned by Bluetooth SIG, Inc. and any use of such marks by Leica Geosystems AG is under license.
SD and microSD are trademarks of the SD-3C, LLC.
Other trademarks and trade names are those of their respective owners.

27 Technical Data

Guide light (EGL):
LED class 1 in accordance with IEC 60825-1 resp. EN 60825-1

Distance meter (Prism), ATRplus and PowerSearch:
Laser class 1 in accordance with IEC 60825-1 resp. EN 60825-1

Laser plummet:
Laser class 2 in accordance with IEC 60825-1 resp. EN 60825-1

Distance meter (Non-Prism):
Laser class 3R in accordance with IEC 60825-1 resp. EN 60825-1

GEOOPTIC.RU

Suggested Equipment Setups

28 Conventional Surveying

28.1 Two Person Surveying using a TS16 Total Station

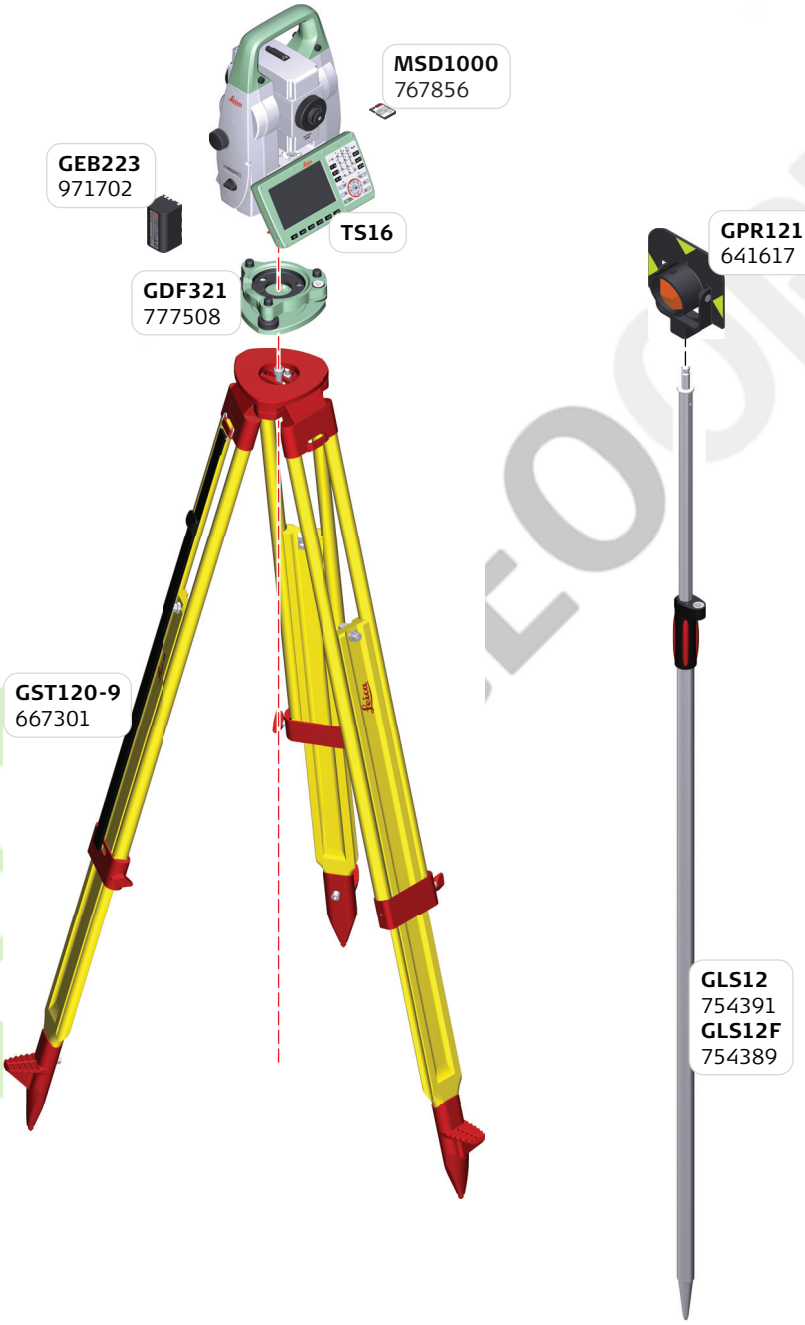

GEOOPTIC.RU

28.2 Two Person Surveying using a TS16 and AP20

GEOOPTIC.RU

28.3 Robotic Surveying using a TS16 Total Station and Field Controller/Tablet

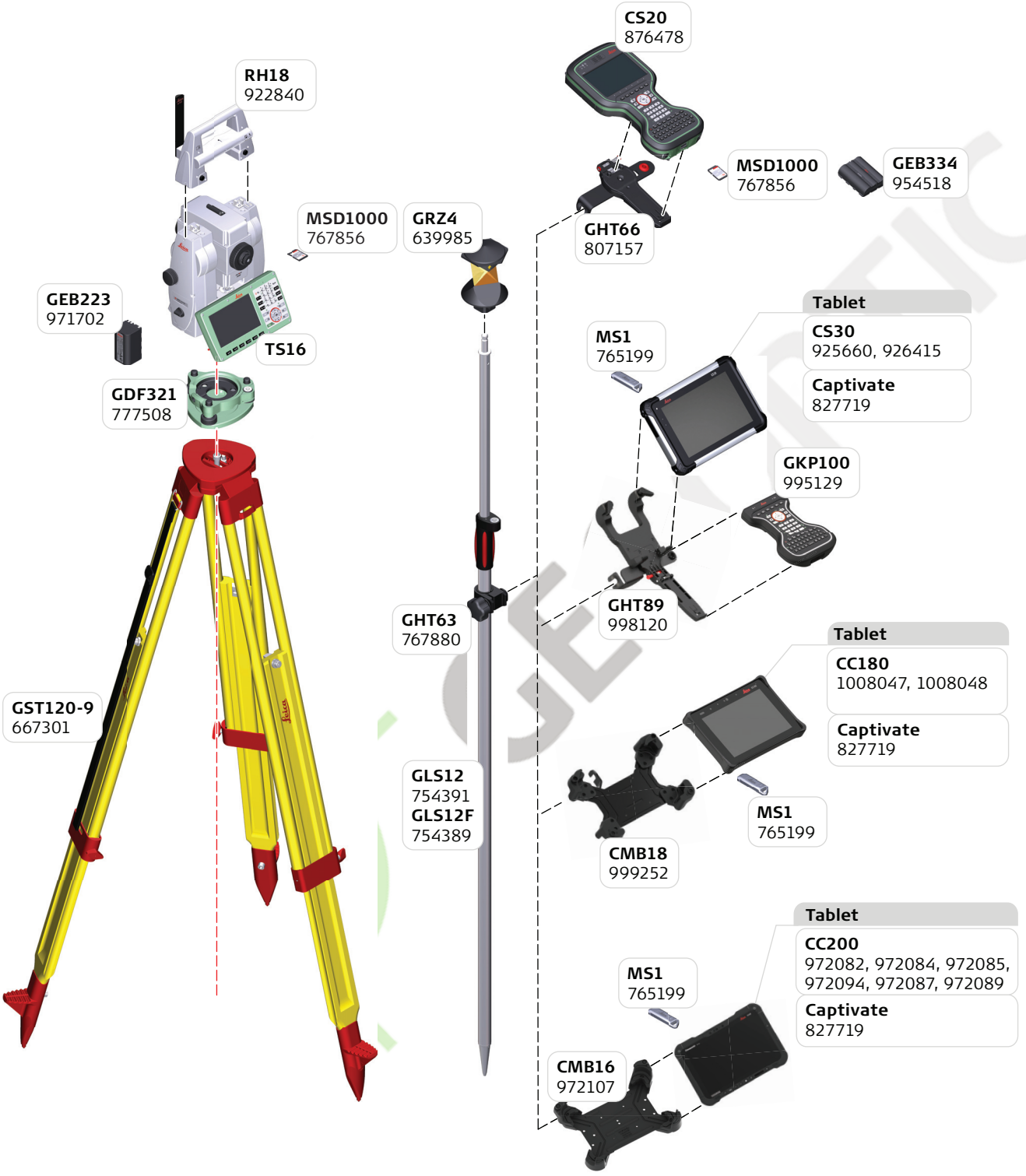

GEOOPTIC.RU

28.4 Robotic Surveying using a TS16, AP20 and Field Controller/Tablet

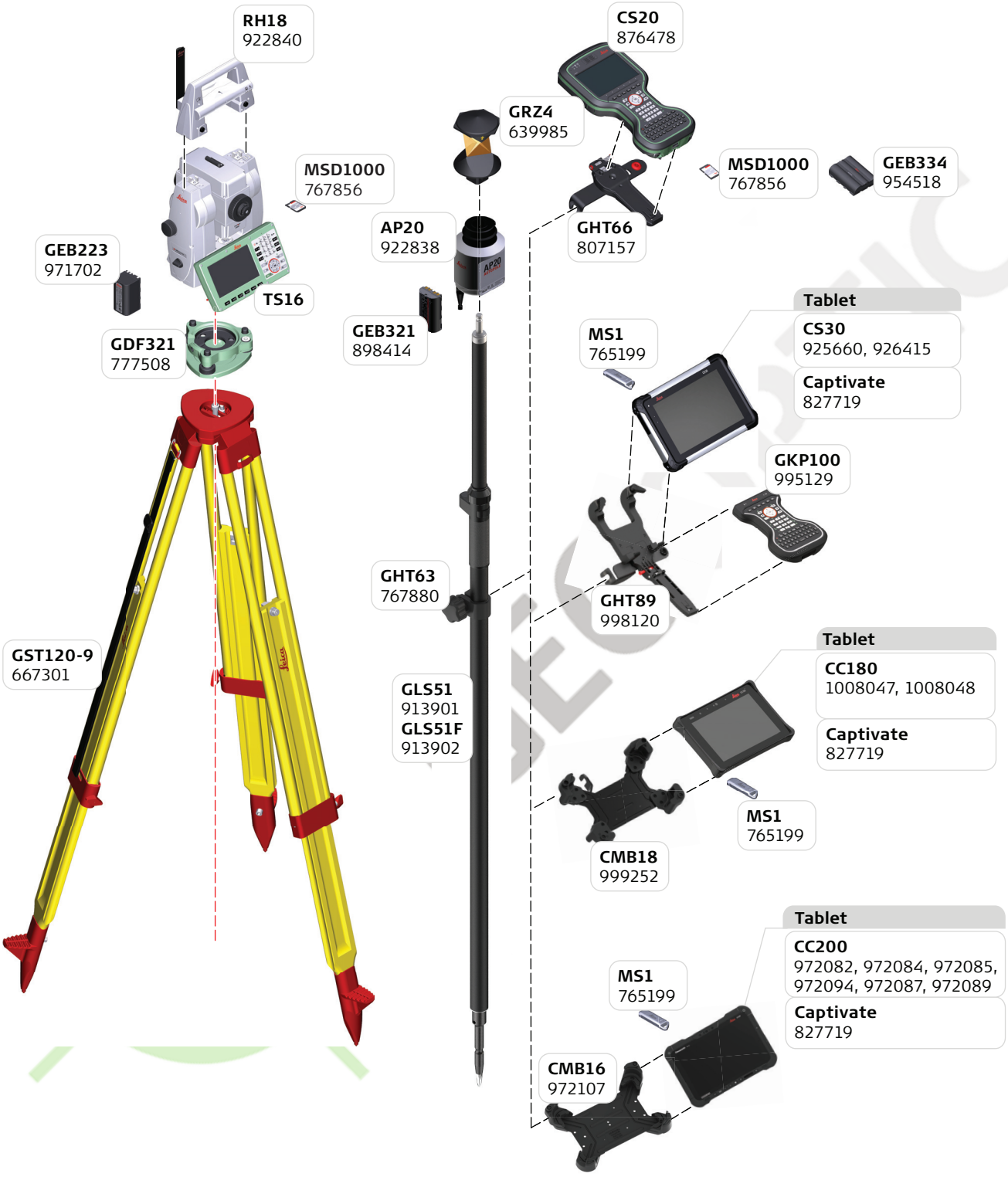

GEOOPTIC.RU

29 SmartPole Surveying

29.1 SmartPole using a GS16 or GS18 GNSS Receiver and Field Controller/Tablet

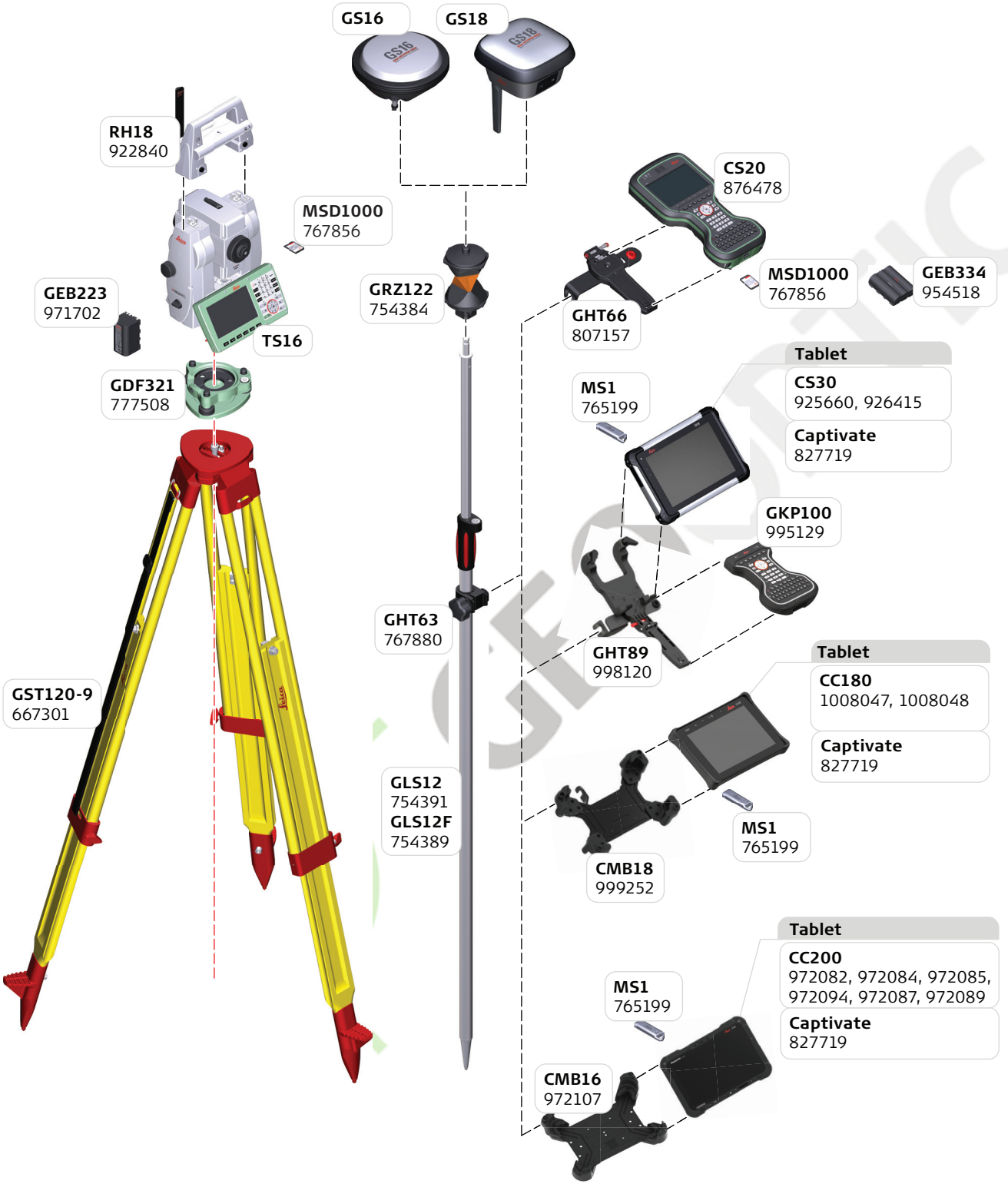

For GNSS anntenna configuration (RTK Antennas and Modems / Radios) and GNSS accessories refer to Leica Captivate GNSS Equipmentlist.

GEOOPTIC.RU

29.2 SmartPole using AP20, a GS16/GS18 GNSS Receiver and a Field Controller/Tablet

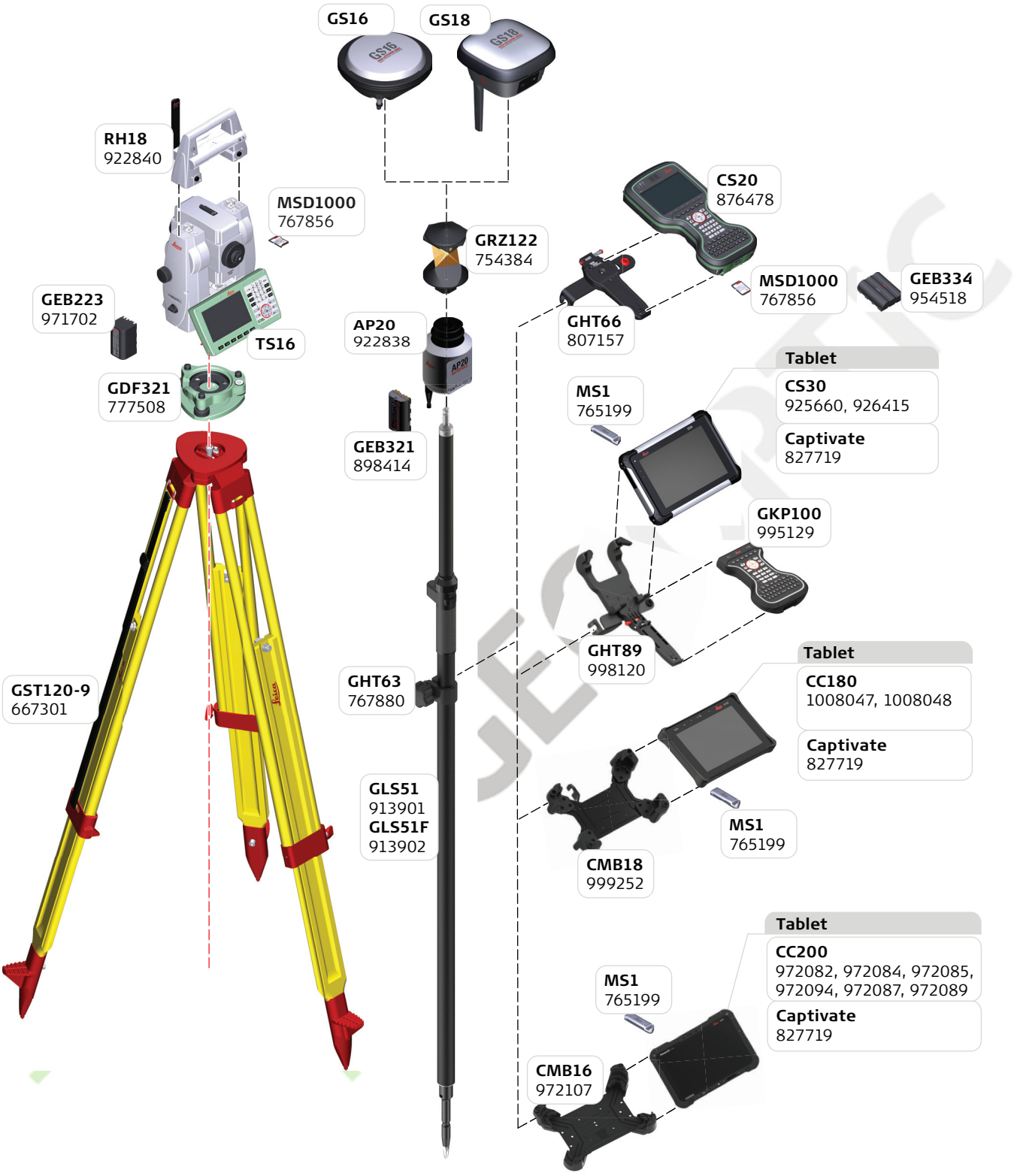

For GNSS anntenna configuration (RTK Antennas and Modems / Radios) and GNSS accessories refer to Leica Captivate GNSS Equipmentlist.

GEOOPTIC.RU

30 AP20 Pole configurations

30.1 GLS51/GLS51F Setup with 1m extension and various tips

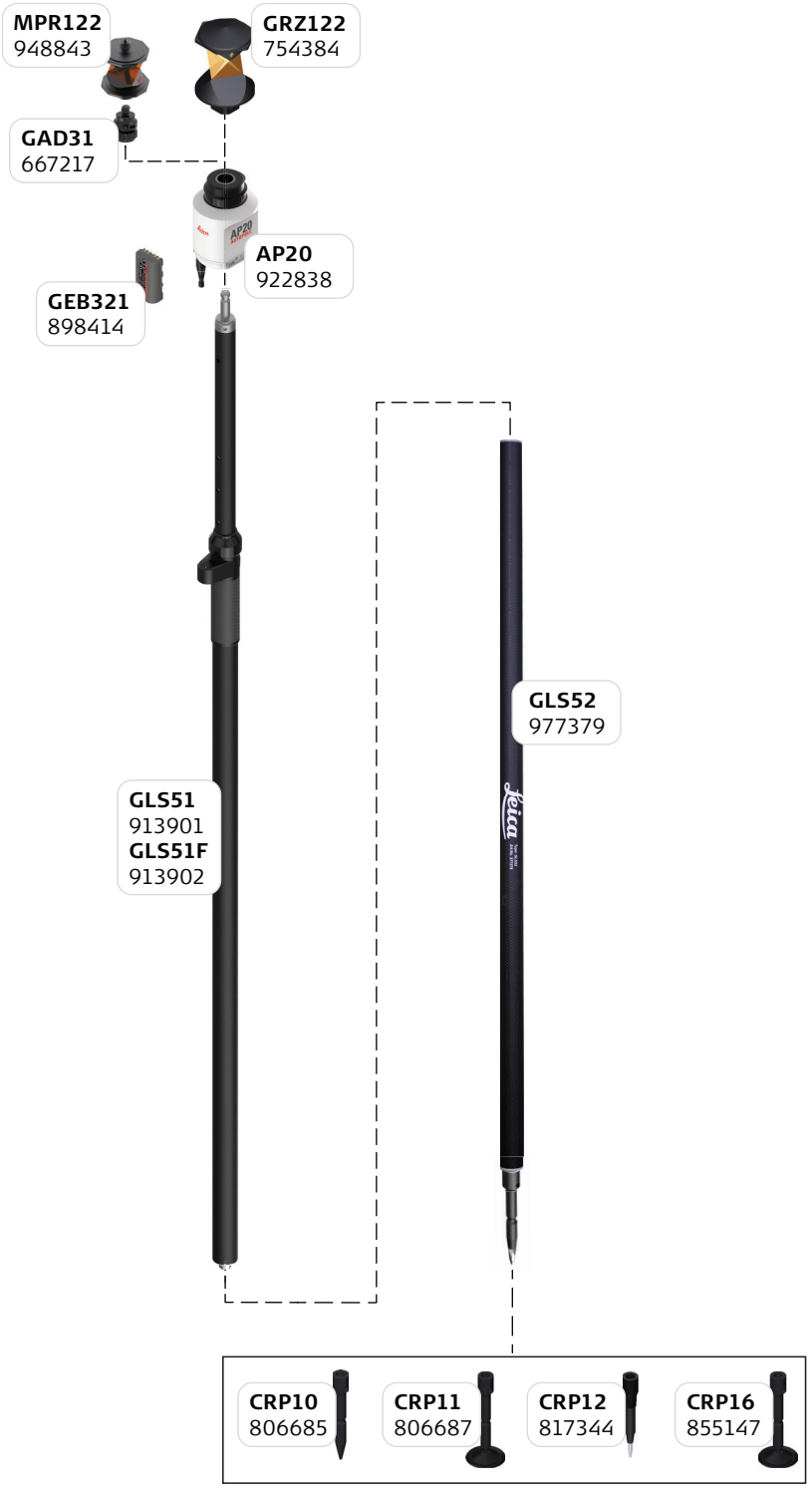

GEOOPTIC.RU

30.2 GLS54 Mini Pole Setup with various tips and holder

GEOOPTIC.RU

31 SmartStation using the GS16 GNSS Receiver

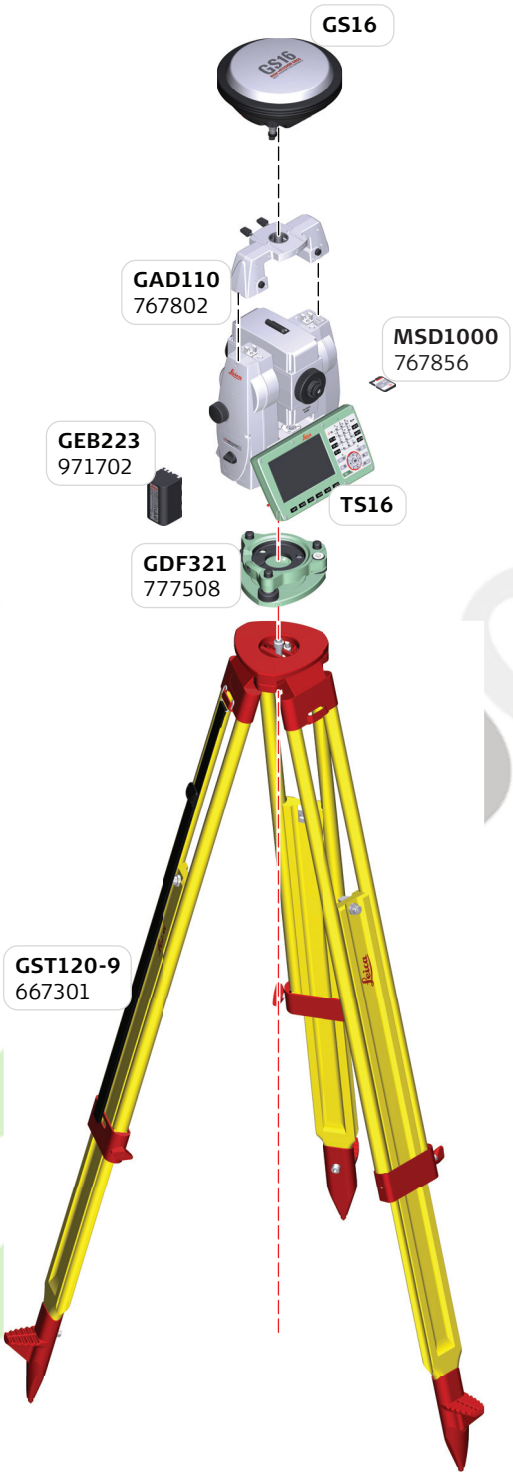

For GNSS anntenna configuration (RTK Antennas and Modems / Radios) and GNSS accessories refer to Leica Captivate GNSS Equipmentlist.

GEOOPTIC.RU

GEOOPTIC

Revolutionising the world of measurement and survey for nearly 200 years, Leica Geosystems creates complete solutions for professionals across the planet. Known for premium products and innovative solution development, professionals in a diverse mix of industries, such as surveying and engineering, safety and security, building and construction, and power and plant, trust Leica Geosystems to capture, analyse and present smart geospatial data. With the highest-quality instruments, sophisticated software and trusted services, Leica Geosystems delivers value every day to those shaping the future of our world.

Leica Geosystems is part of Hexagon (Nasdaq Stockholm: HEXA B; hexagon.com), a leading global provider of information technologies that drive quality and productivity improvements across geospatial and industrial enterprise applications.

Swiss Technology
by Leica Geosystems

Illustrations, descriptions and technical specifications are not binding and may change.
Printed in Switzerland - Copyright Leica Geosystems AG, Heerbrugg, Switzerland, 2024.
837007 - 3.0.0en - VII.24

Leica Geosystems AG
Heinrich-Wild-Strasse
CH-9435 Heerbrugg
Switzerland
Phone +41 71 727 31 31
www.leica-geosystems.com

- when it has to be **right**

Leica Geosystems

GEOOPTIC.RU